2.5 Brakes C and D

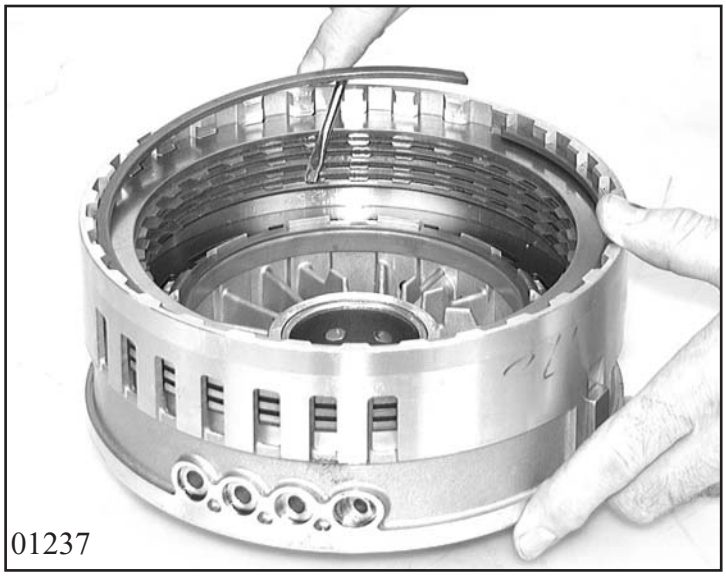
01237

Lever out snap ring of brake C and remove complete clutch pack.

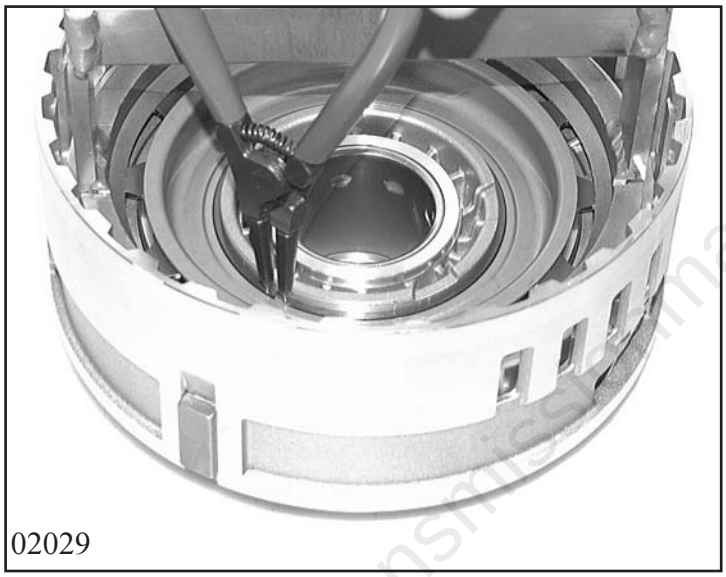
02029

Press down cup spring C in the mandrel press with assembly bracket 5x46 001 501, lever out the snap ring and remove the cup spring.

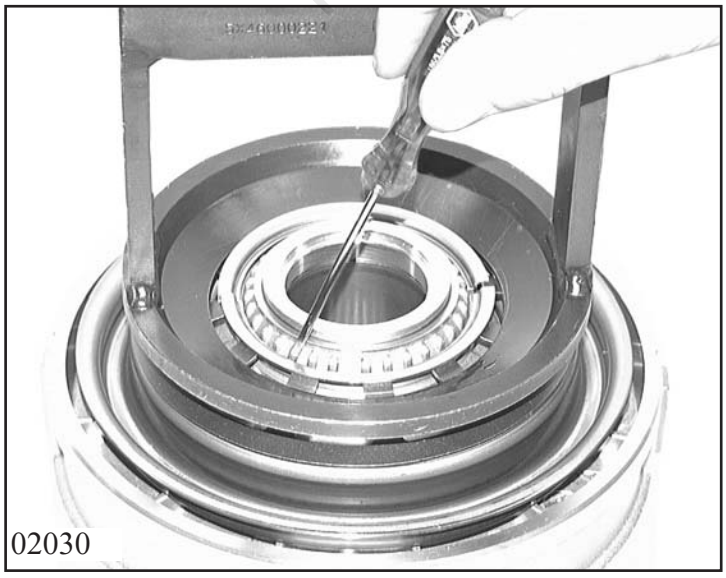
02030

Turn the cylinder around and press down cup spring D in the mandrel press with assembly bracket 5x46 000 221; take out split retaining ring, stop ring and remove cup spring.

Transmissionmanuals.com

Press down baffle plate and take out split retaining ring.

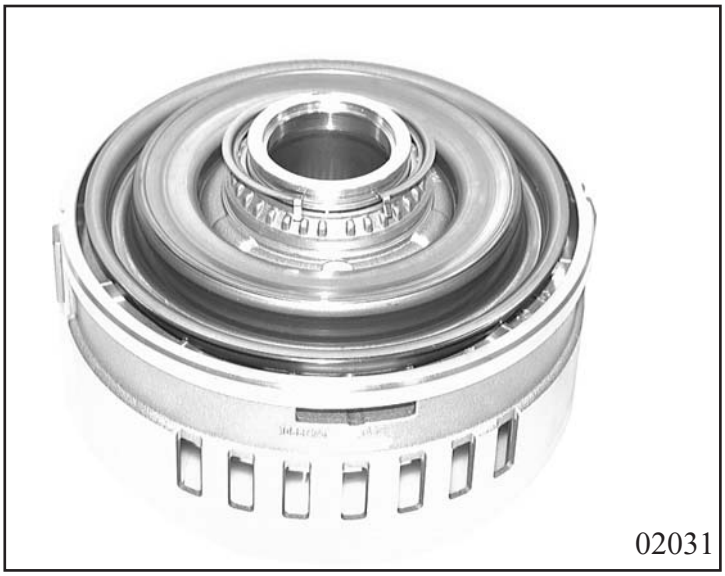

Carefully press out piston D with a compressed air supply at the oil guide bore.
While doing this, blank off the two other bores.
Pull 2 O-ring seals off cylinder D and 1 O-ring seal off the piston.



Transmissionparts.com

2.6 Output shaft with parking lock

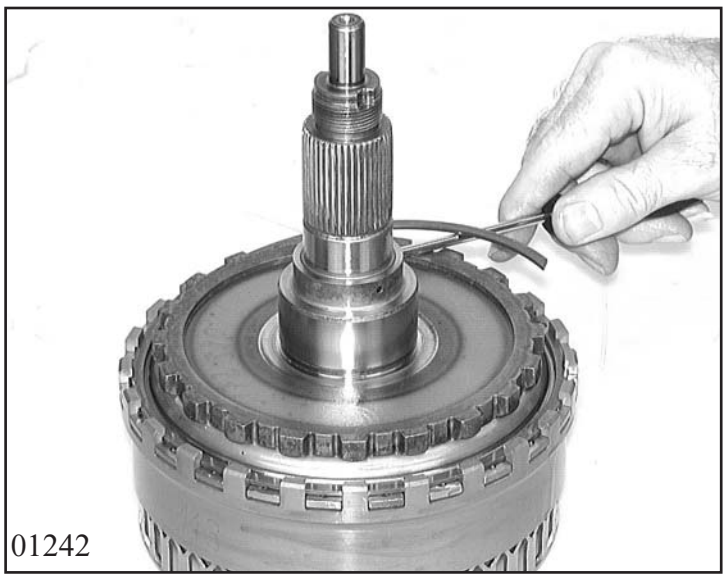
01242

Separate theoutput shaft from the ring gear by levering out the snap ring.

Transmissionmanuals.com

Transmissionmanuals.com